SPECTRALITE SignOplus

Light stick for signallers

Product sheet

The light stick for signallers is designed to increase the visibility of construction site signallers. Since standard flags are much less visible at night, the light produced by the light stick ensures that the signs are effectively perceived by all road users. Economically designed with a translucent red PVC tube containing six brightly lit LEDs and an ABS plastic handle to withstand repeated use and the harshest of elements. Powered by two D-cell batteries, the light stick for signallers offers three distinct lighting modes: flashing, continuous and "flashlight" at the tip.

Technical Informations

Product N°:	BLS-540
Dimensions	
Overall Length:	545 mm (21,47")
Usable Length:	337 mm (13,25")
Diameter:	40 mm (1,57")
Weight:	0,45 kg (1 lbs.)
Materials	
Light stick:	Transuscent PVC
Handle:	ABS Plastic
Available Colours:	
Light stick:	Red
Handle:	Black
LEDs:	Red
Flashlight:	White

- High visibility
- Three lighting modes
- Powered by 2 D-cell batteries (not included)

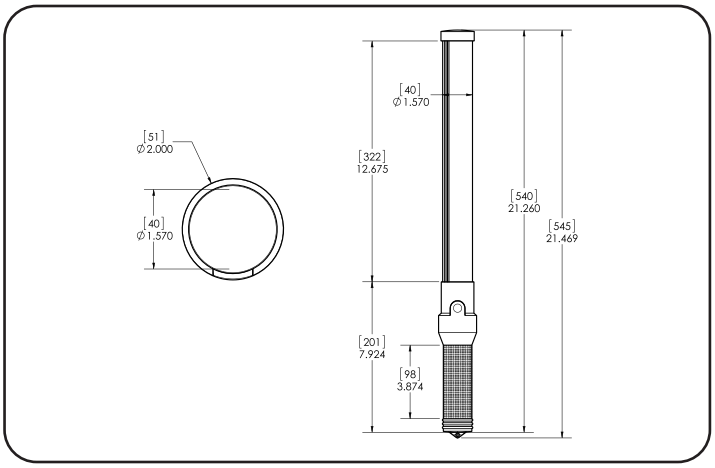

All Rights Reserved © Spectralite Signoplus inc. 2022